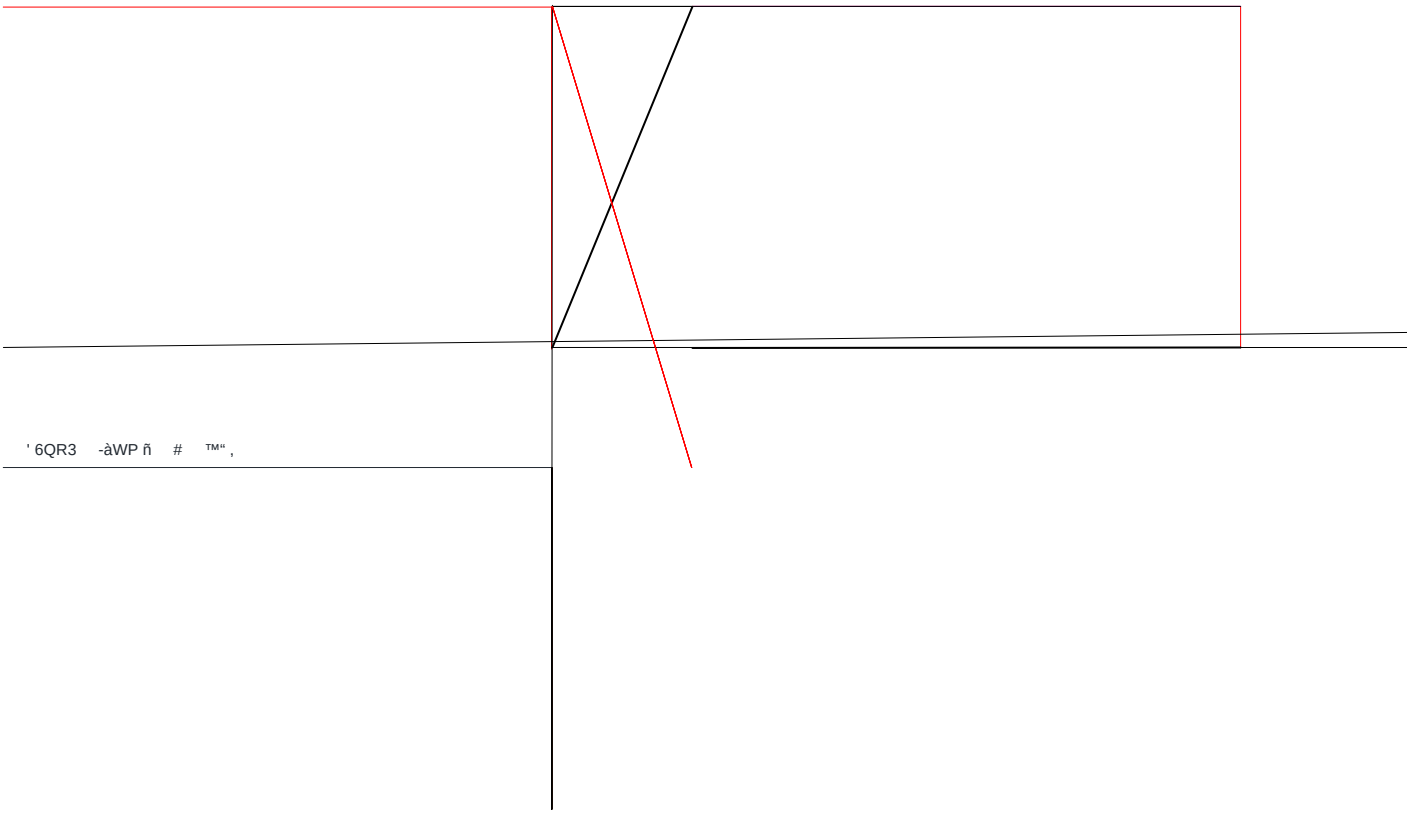
' 6QR3 -àWP ñ # ™“ ,

Gate Charge Test Circuit & Waveform

Unclamped Inductive Switching (UIS) Test Circuit & Waveforms

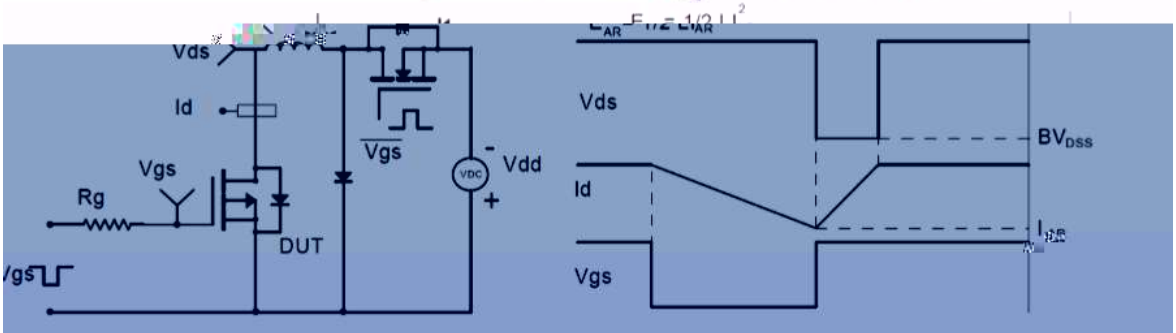
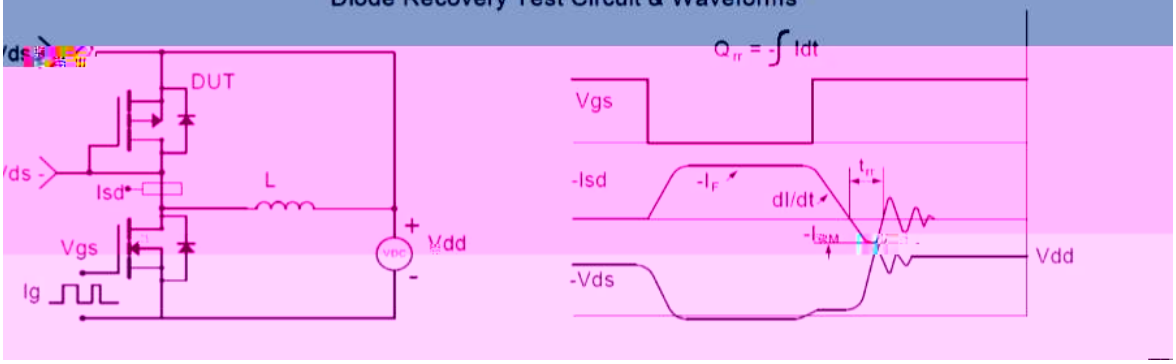
Diode Recovery Test Circuit & Waveforms